## Features

- Miniature Thermal Cutoff (TCO) device
- Surface mount, smallest body size
- Overtemperature and overcurrent protection
- Controls abnormal, excessive current virtually instantaneously, up to rated limits
- Wide range of temperature options
- High corrosion resistance
- Two height options: low profile & high force withstand

## Applications

- Battery cell protection for:
  - Notebook PCs
  - Tablet PCs
  - Smart phones
- Overtemperature protection for:
  - USB Type C cables (e.g. smart phone cables, notebook AC adapters)
  - Electronic cigarettes
  - Medical heaters***

# SC Series Breaker (Surface Mount Thermal Cutoff Device)

## Ratings

| Specification | A-TYPE | | | |
|---|---|---|---|---|
| | SC72AAA, SC72AAB | SC77AAA, SC77AAB | SC82AAA, SC82AAB | SC85AAA, SC85AAB |
| Trip Temperature | 72 °C ± 5 °C | 77 °C ± 5 °C | 82 °C ± 5 °C | 85 °C ± 5 °C |
| Reset Temperature | 40 °C min. | | | |
| Contact Rating | DC9 V / 25 A, 6000 cycles | | | |
| Maximum Breaking Current | DC5 V / 50 A, 100 cycles | | | |
| Maximum Voltage | DC28 V / 25 A, 100 cycles | | | |
| Minimum Holding Voltage | 3 V @ 25 °C for 1 minute | | | |
| Maximum Leakage Current | 200 mA max. @ 25 °C | | | |
| Resistance | 5 milliohms max. | | | |

Mini-breaker TCOs reset when the following conditions are met:

- The ambient temperature has dropped by 10 °C below the minimum trip temperature; and
- Power to the TCO has been cycled (off/on)

## Agency Recognition

| Description | |
|---|---|
| UL, cUL | File Number: E215638 *(UL 60730)* |
| TUV | File Number: R 50411018 0001~0002 *(EN 60730 2-9-2010)* |

## Product Structure

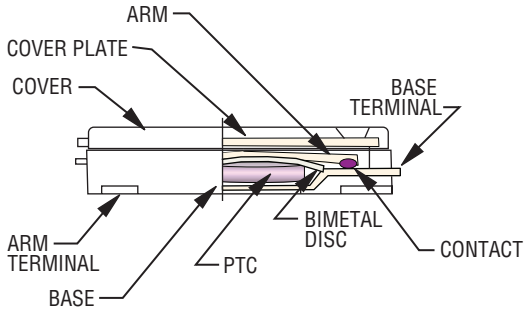


- Model SCxAAB is the low profile 0.94 mm height version.
- Model SCxAAA is designed with a reinforced cover to withstand higher forces during the USB cable manufacturing injection molding process.

## How to Order

**SC 77 A A B**

Series Designator

Trip Temperature (±5 °C)
- 72
- 77
- 82
- 85

Arm Material
A = Cu Alloy, High current type

Body Material
A = PPS

Body Thickness
A = 1.07 ± 0.05 mm
B = 0.94 ± 0.05 mm

## Circuit Diagram

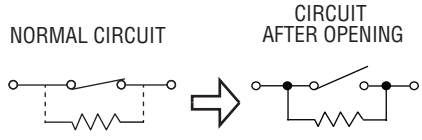


**WARNING Cancer and Reproductive Harm -** www.P65Warnings.ca.gov

* RoHS Directive 2002/95/EC Jan. 27, 2003 including annex and RoHS Recast 2011/65/EU June 8, 2011.

** Bourns considers a product to be "halogen free" if (a) the Bromine (Br) content is 900 ppm or less; (b) the Chlorine (Cl) content is 900 ppm or less; and (c) the total Bromine (Br) and Chlorine (Cl) content is 1500 ppm or less.

*** Excluding life-saving, life-critical or life-sustaining applications.

Specifications are subject to change without notice.
Users should verify actual device performance in their specific applications.
The products described herein and this document are subject to specific legal disclaimers as set forth on the last page of this document, and at www.bourns.com/docs/legal/disclaimer.pdf.

## Product Dimensions

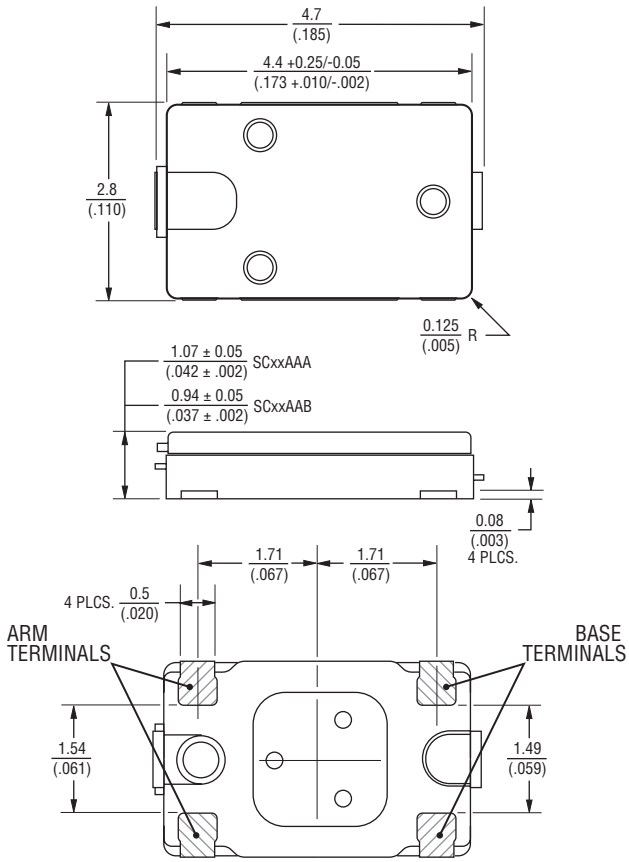


DIMENSIONS: MM (INCHES)

## Typical Performance

**Current vs. Temperature Curves**
**A-Type**

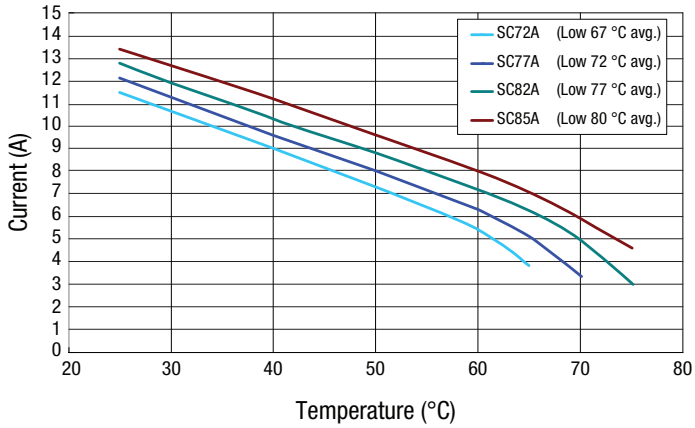


Specifications are subject to change without notice.
Users should verify actual device performance in their specific applications.
The products described herein and this document are subject to specific legal disclaimers as set forth on the last page of this document, and at www.bourns.com/docs/legal/disclaimer.pdf.

## Surface Mount Recommendations

The Model SC Series breaker is designed for reflow and hand soldering. It is not designed or warranted for flow soldering. The following conditions must be adhered to:

Reflow Soldering:
The recommended reflow soldering conditions are as follows:

150 ~ 180 °C ..... 100 ~ 150 seconds
≤220 °C..... 20 ~ 40 seconds
255 ~ 260 °C ..... 5 ~ 10 seconds

Process breaker in a reflow furnace using the profile shown above three times, followed by positioning the breaker in ambient temperature of +25 °C for 8 hours.

**Recommended Reflow Profile**

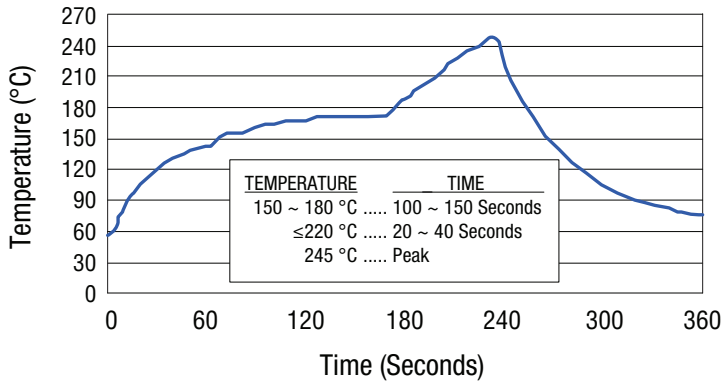


***Do not expose the breaker to temperatures exceeding +260 °C.***

## Recommended Land Pattern

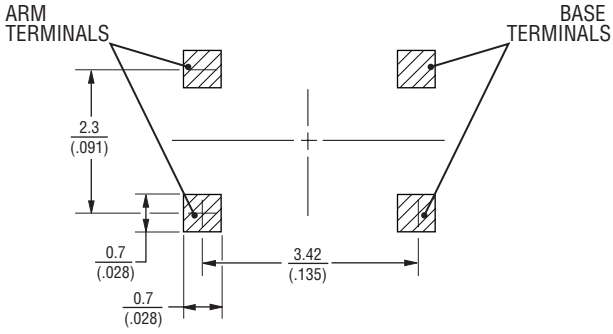


*Recommended Mask Thickness: 0.12 mm / (.005 in.)*

*Recommended Solder Particle Size: 30 µm*

DIMENSIONS: MM (INCHES)

## Mounting Cautions

In order to protect the housing and mechanical parts inside from deformation, prevent excessive load at the time of part absorption / part deployment and mounting. A part absorption nozzle more than 2 mm in diameter with a 3 N (5 N max.) mounting load is recommended. Any shock to the product by the nozzle during the mounting procedure may have a negative impact on the function of the breaker.

Specifications are subject to change without notice.
Users should verify actual device performance in their specific applications.
The products described herein and this document are subject to specific legal disclaimers as set forth on the last page of this document, and at www.bourns.com/docs/legal/disclaimer.pdf.

## Standard Packaging Specifications

Reel (13 inch) .....5,000 pcs. (fixed)
Outer Box (690 mm x 344 mm x 136 mm) .....50,000 pcs. (fixed)
Marking.....A label will be attached on the reel and outer box which includes the following items, at a minimum: Part name, part number, quantity, lot number, safety approval mark (UL, etc.), company name (Bourns KK) and any other items required by the customer

### *REEL*

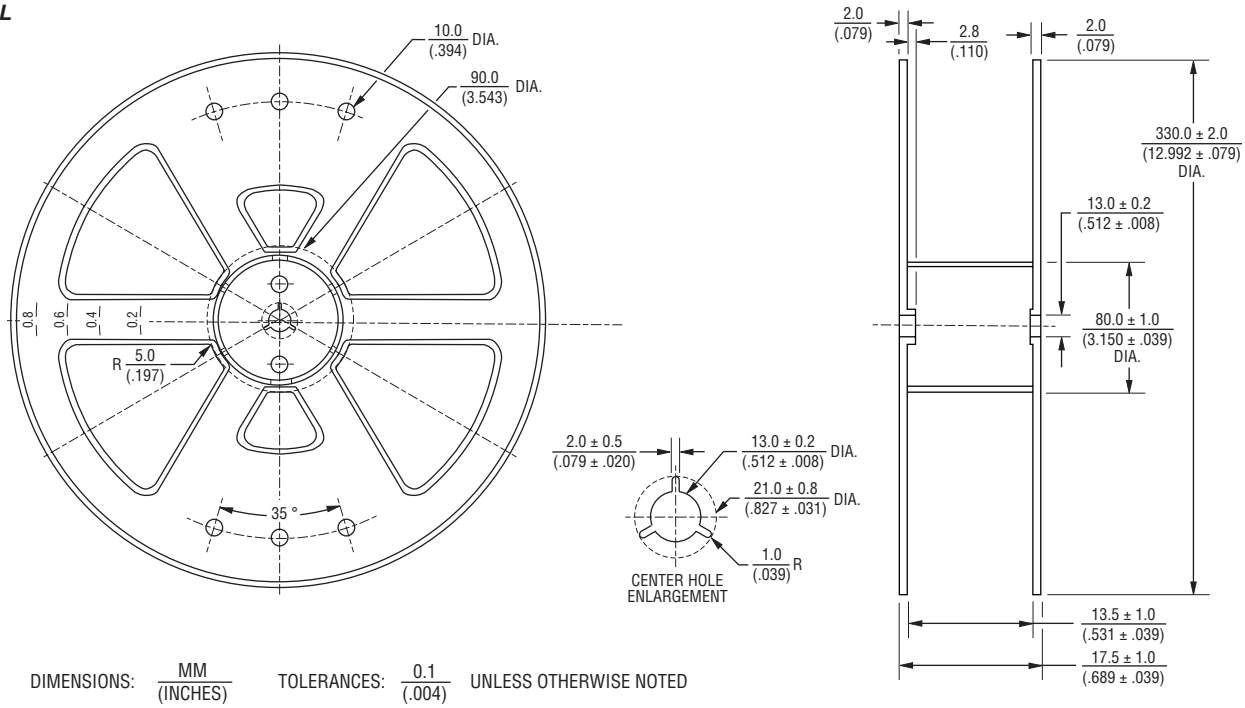


DIMENSIONS: MM (INCHES) TOLERANCES: 0.1 (.004) UNLESS OTHERWISE NOTED

### *CARRIER TAPE*

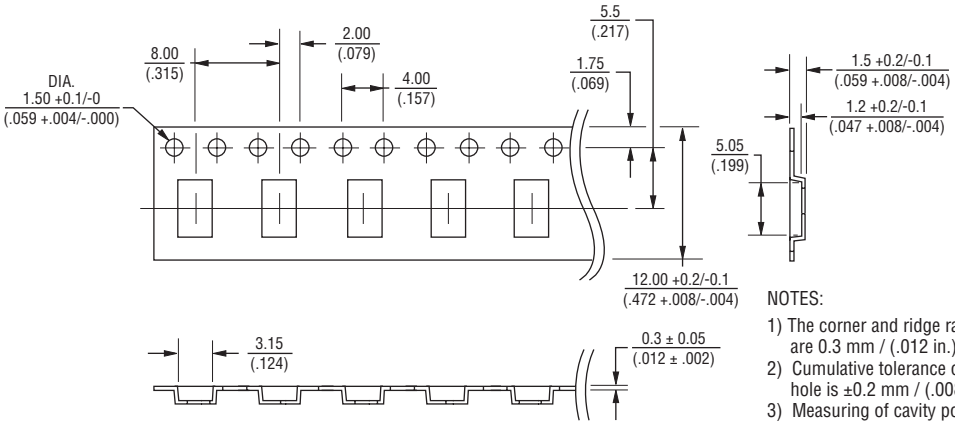


NOTES:

1) The corner and ridge radiuses (R) of inside cavity are 0.3 mm / (.012 in.) max.
2) Cumulative tolerance of 10 pitches of the sprocket hole is ±0.2 mm / (.008 in.).
3) Measuring of cavity positioning is based on cavity center in accordance with JIS/IEC standard.

Specifications are subject to change without notice.
Users should verify actual device performance in their specific applications.
The products described herein and this document are subject to specific legal disclaimers as set forth on the last page of this document, and at www.bourns.com/docs/legal/disclaimer.pdf.

## Typical Part Marking

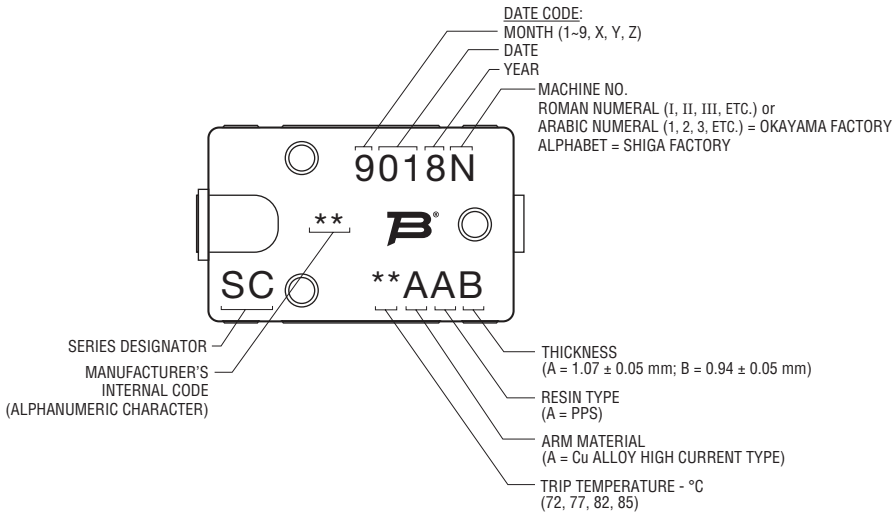


## Application Temperature Range

.....-30 ~ 100 °C

## Environmental Specifications

Moisture Sensitivity Level..... 1
ESD Classification (HBM)..... 6

## Storage Conditions

1) The breaker must be stored in the standard packaging with the following conditions: ambient temperature of -10 to +40 °C, RH <75 % with no radical temperature change, direct sunshine, excessive vibration or shock.

2) Avoid storage locations where there is a possibility of generating corrosive gas such as from salt breeze, chlorine, hydrogen sulfide, ammonium, sulfide-oxidation, hydrogen chloride, acetate, etc.

3) Storage period should be no longer than 24 months from date of shipment.

Specifications are subject to change without notice.
Users should verify actual device performance in their specific applications.
The products described herein and this document are subject to specific legal disclaimers as set forth on the last page of this document, and at www.bourns.com/docs/legal/disclaimer.pdf.

## Caution when using Breaker

Before using the breaker, please fully read the *DESIGN AND HANDLING CAUTIONS* stated below to avoid breaker performance deterioration and/or damage to the breaker body or terminal.

## DESIGN CAUTIONS

1. Use within the electrical ratings specified in this data sheet. If used over the rating of voltage or current, ON-OFF life might be impacted and contact may deteriorate due to breaker arm damage.
2. If used over the maximum electrical rating specified in this data sheet, the circuit may not open safely or operate properly. Please test your device for any abnormalities and confirm that the breaker will open the circuit safely in your device. Any use over the maximum electrical rating is at the sole risk of the user.
3. Mount the breaker on your device where heat is the highest in order to transfer it effectively to the breaker.
4. If the breaker is affixed with an adhesive (resin, etc.), before proceeding, fully test, evaluate and verify that the adhesive presents no negative effects on the breaker before proceeding.
5. After the breaker is mounted, affix it so that the breaker body and terminals will not move. If not affixed properly, breaker resistance could increase or contact could open due to stress during handling or vibration/shock during transportation.
6. If breaker is to be resin-molded, test and evaluate the application to determine whether the breaker can be used effectively.
7. The breaker cannot be used as a repetitive ON-OFF thermostat.
8. The breaker is not washable. Do not wash.
9. Do not let a solder iron touch the breaker body.
10. Do not attach solder to the breaker body.
11. When mounting and after mounting the breaker, do not apply supersonic vibration. Vibration and heat may cause breaker resistance to increase or may cause body damage. If you plan to apply supersonic vibration after mounting the breaker, you will need to evaluate whether the breaker is suitable for your specific application. The breaker is not designed or warranted to withstand supersonic vibration.
12. Do not use the breaker in the following environments:
    a) Water, oil, chemical or organic solutions
    b) Direct sunlight, outdoor exposure, dust
    c) Dew condensation, where the breaker could get wet
    d) Salt breeze, chlorine, hydrogen sulfide, ammonium, sulfide-oxidation, hydrogen chloride, acetate and anywhere there is a possibility of generating corrosive gas such as sulfurous acid gas
    e) Strong static electric charge or electromagnetic wave
13. The breaker is not designed or tested for, and should not be used in, aerospace, airplane, nuclear, military, life-saving, life-critical or life-sustaining medical and other related applications where failure or malfunction may result in personal injury, death or severe property or environmental damage.

Specifications are subject to change without notice.
Users should verify actual device performance in their specific applications.
The products described herein and this document are subject to specific legal disclaimers as set forth on the last page of this document, and at www.bourns.com/docs/legal/disclaimer.pdf.

**Caution when using Breaker (Continued)**

## HANDLING CAUTIONS

1. Since the breaker body is composed of plastic parts, do not clamp or dent with tools as this could cause a resistance increase or body damage.
2. Breaker terminals are thin copper-alloy with right angle edges. Handle carefully to avoid injury to fingers. Handling while wearing finger cots and using tweezers is recommended.
3. When mounting the breaker on a cell or PCM board, be careful to avoid placing excessive stress on the breaker body and terminals. Excessive stress may cause a resistance increase or body damage. Please refer to the following cautions:
   a) Do not apply more than 5 N (AAB) or 10 N (AAA) moment to the breaker body (refer to Figure 1)
   b) Do not apply more than 1.5 cN-m (AAB) or 3 cN-m (AAA) twist torque to the breaker body (refer to Figure 2)
   c) Do not apply more than 15 N (AAB) or 30 N (AAA) bending force to the breaker body (refer to Figure 3)

Figure 1

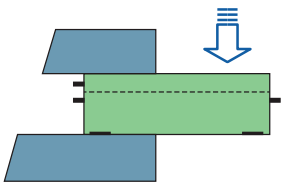

Figure 2

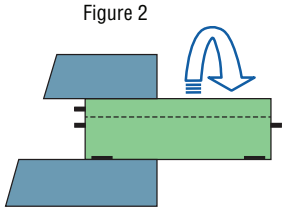

Figure 3

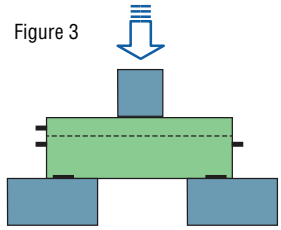

Due to possible updates to safety standards and other reasons, there may be changes in specifications for this data sheet without prior notification. Therefore, before design-in for your application, please contact us for the most up-to-date specifications.

BOURNS®

**Asia-Pacific:**
Tel: +886-2 2562-4117
Email: asiacus@bourns.com

**Europe:**
Tel: +36 88 520 390
Email: eurocus@bourns.com

**The Americas:**
Tel: +1-951 781-5500
Email: americus@bourns.com

**www.bourns.com**

12/18

Specifications are subject to change without notice.
Users should verify actual device performance in their specific applications.
The products described herein and this document are subject to specific legal disclaimers as set forth on the last page of this document, and at www.bourns.com/docs/legal/disclaimer.pdf.

# Legal Disclaimer Notice

BOURNS®

This legal disclaimer applies to purchasers and users of Bourns® products manufactured by or on behalf of Bourns, Inc. and its affiliates (collectively, "Bourns").

Unless otherwise expressly indicated in writing, Bourns® products and data sheets relating thereto are subject to change without notice. Users should check for and obtain the latest relevant information and verify that such information is current and complete before placing orders for Bourns® products.

The characteristics and parameters of a Bourns® product set forth in its data sheet are based on laboratory conditions, and statements regarding the suitability of products for certain types of applications are based on Bourns' knowledge of typical requirements in generic applications. The characteristics and parameters of a Bourns® product in a user application may vary from the data sheet characteristics and parameters due to (i) the combination of the Bourns® product with other components in the user's application, or (ii) the environment of the user application itself. The characteristics and parameters of a Bourns® product also can and do vary in different applications and actual performance may vary over time. Users should always verify the actual performance of the Bourns® product in their specific devices and applications, and make their own independent judgments regarding the amount of additional test margin to design into their device or application to compensate for differences between laboratory and real world conditions.

Unless Bourns has explicitly designated an individual Bourns® product as meeting the requirements of a particular industry standard (e.g., ISO/TS 16949) or a particular qualification (e.g., UL listed or recognized), Bourns is not responsible for any failure of an individual Bourns® product to meet the requirements of such industry standard or particular qualification. Users of Bourns® products are responsible for ensuring compliance with safety-related requirements and standards applicable to their devices or applications.

Bourns® products are not recommended, authorized or intended for use in nuclear, lifesaving, life-critical or life-sustaining applications, nor in any other applications where failure or malfunction may result in personal injury, death, or severe property or environmental damage. Unless expressly and specifically approved in writing by two authorized Bourns representatives on a case-by-case basis, use of any Bourns® products in such unauthorized applications might not be safe and thus is at the user's sole risk. Life-critical applications include devices identified by the U.S. Food and Drug Administration as Class III devices and generally equivalent classifications outside of the United States.

Bourns expressly identifies those Bourns® standard products that are suitable for use in automotive applications on such products' data sheets in the section entitled "Applications." Unless expressly and specifically approved in writing by two authorized Bourns representatives on a case-by-case basis, use of any other Bourns® standard products in an automotive application might not be safe and thus is not recommended, authorized or intended and is at the user's sole risk. If Bourns expressly identifies a sub-category of automotive application in the data sheet for its standard products (such as infotainment or lighting), such identification means that Bourns has reviewed its standard product and has determined that if such Bourns® standard product is considered for potential use in automotive applications, it should only be used in such sub-category of automotive applications. Any reference to Bourns® standard product in the data sheet as compliant with the AEC-Q standard or "automotive grade" does not by itself mean that Bourns has approved such product for use in an automotive application.

Bourns® standard products are not tested to comply with United States Federal Aviation Administration standards generally or any other generally equivalent governmental organization standard applicable to products designed or manufactured for use in aircraft or space applications. Bourns expressly identifies Bourns® standard products that are suitable for use in aircraft or space applications on such products' data sheets in the section entitled "Applications." Unless expressly and specifically approved in writing by two authorized Bourns representatives on a case-by-case basis, use of any other Bourns® standard product in an aircraft or space application might not be safe and thus is not recommended, authorized or intended and is at the user's sole risk.

The use and level of testing applicable to Bourns® custom products shall be negotiated on a case-by-case basis by Bourns and the user for which such Bourns® custom products are specially designed. Absent a written agreement between Bourns and the user regarding the use and level of such testing, the above provisions applicable to Bourns® standard products shall also apply to such Bourns® custom products.

Users shall not sell, transfer, export or re-export any Bourns® products or technology for use in activities which involve the design, development, production, use or stockpiling of nuclear, chemical or biological weapons or missiles, nor shall they use Bourns® products or technology in any facility which engages in activities relating to such devices. The foregoing restrictions apply to all uses and applications that violate national or international prohibitions, including embargos or international regulations. Further, Bourns® products and Bourns technology and technical data may not under any circumstance be exported or re-exported to countries subject to international sanctions or embargoes. Bourns® products may not, without prior authorization from Bourns and/or the U.S. Government, be resold, transferred, or re-exported to any party not eligible to receive U.S. commodities, software, and technical data.

To the maximum extent permitted by applicable law, Bourns disclaims (i) any and all liability for special, punitive, consequential, incidental or indirect damages or lost revenues or lost profits, and (ii) any and all implied warranties, including implied warranties of fitness for particular purpose, non-infringement and merchantability.

*For your convenience, copies of this Legal Disclaimer Notice with German, Spanish, Japanese, Traditional Chinese and Simplified Chinese bilingual versions are available at:*

*Web Page: http://www.bourns.com/legal/disclaimers-terms-and-policies*

*PDF: http://www.bourns.com/docs/Legal/disclaimer.pdf*